Free Exit

Slide Gate

BFTAres Ultra 1000-1500
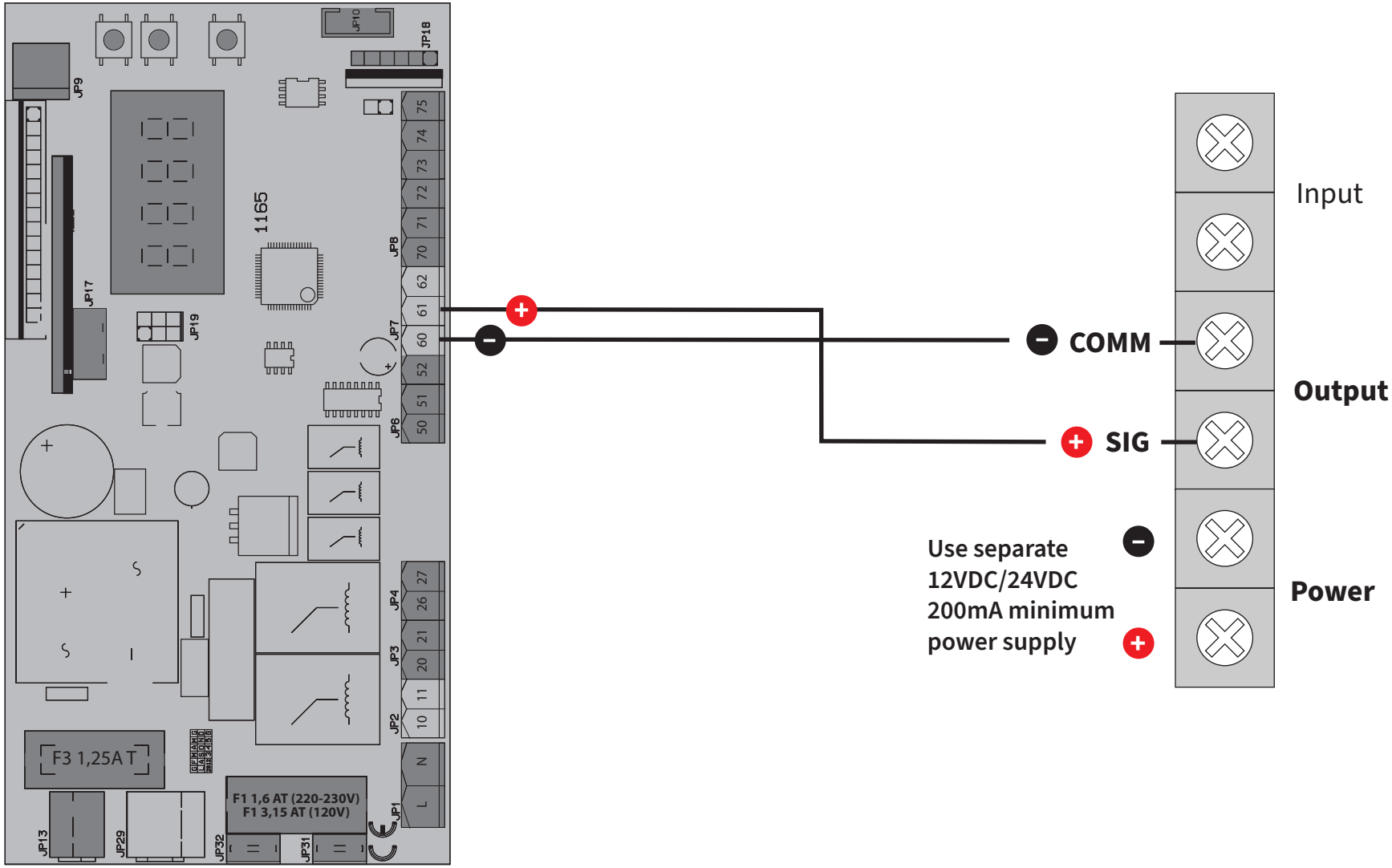
OVS-01GT wiring