Free Exit
Swing Gate E4

OVS-01GT wiring
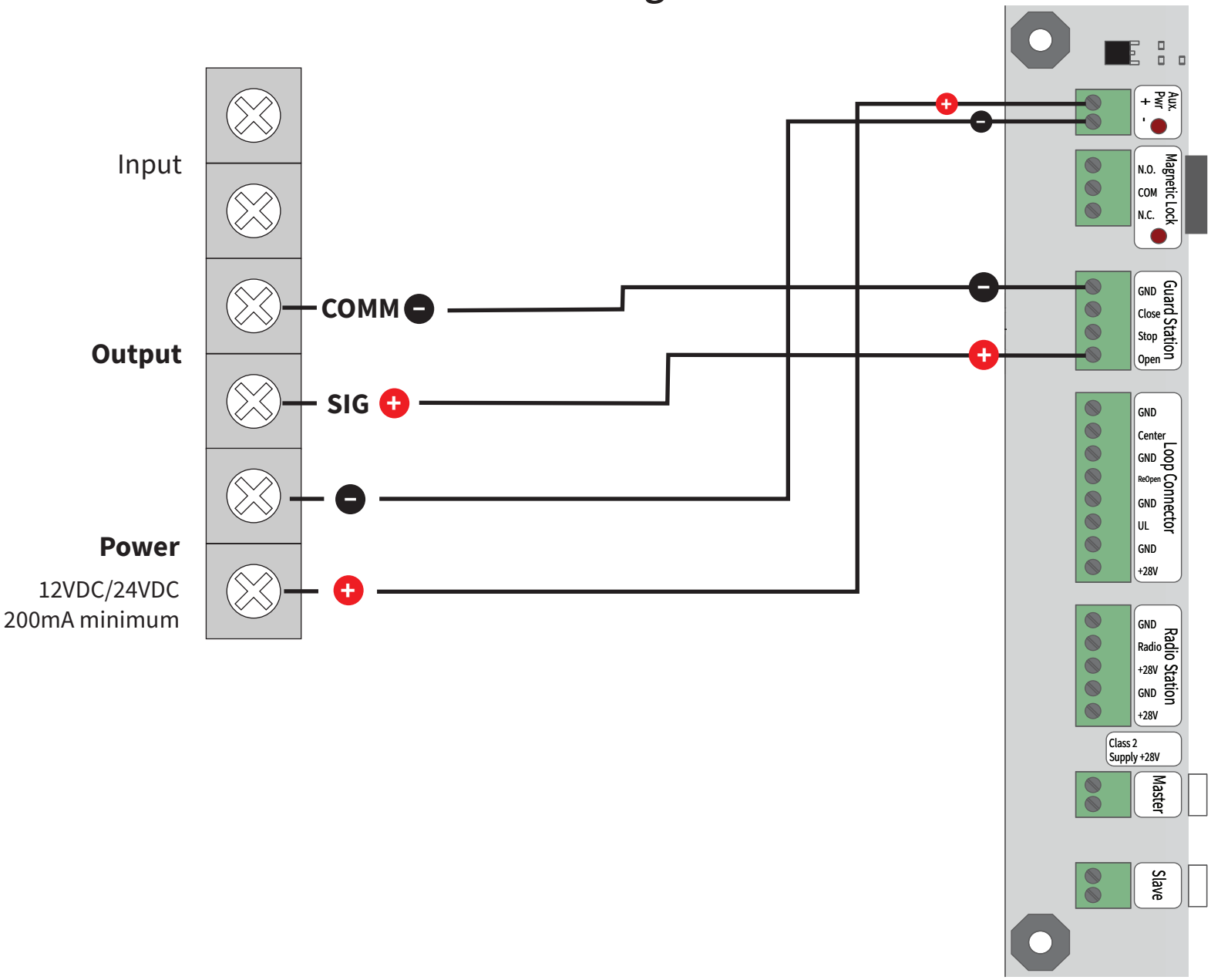
Viking Access Systems